LC-9500HR EXERCISE BIKE

GK18-00012-XXXX

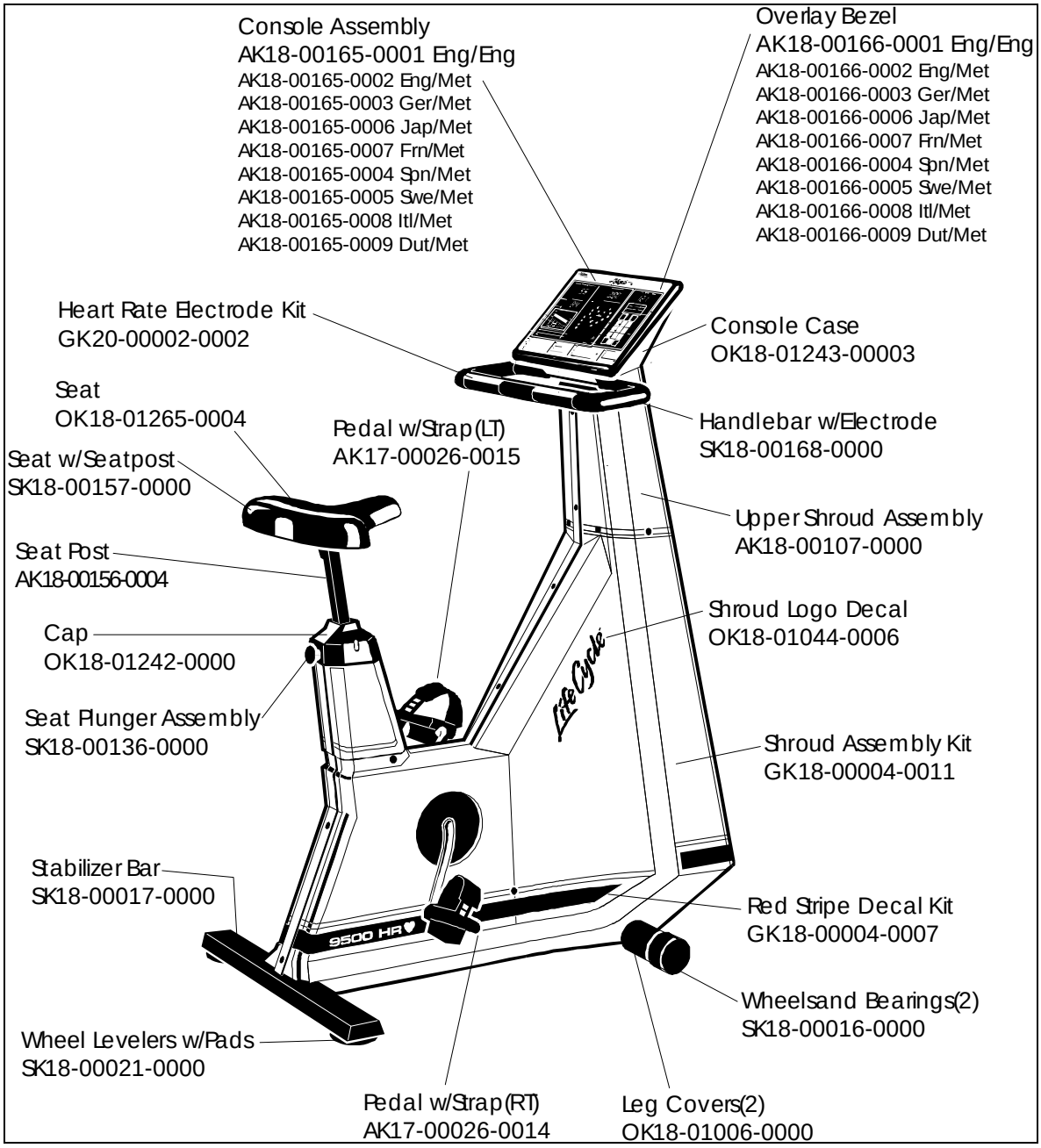

Revision Date: 8/12/98

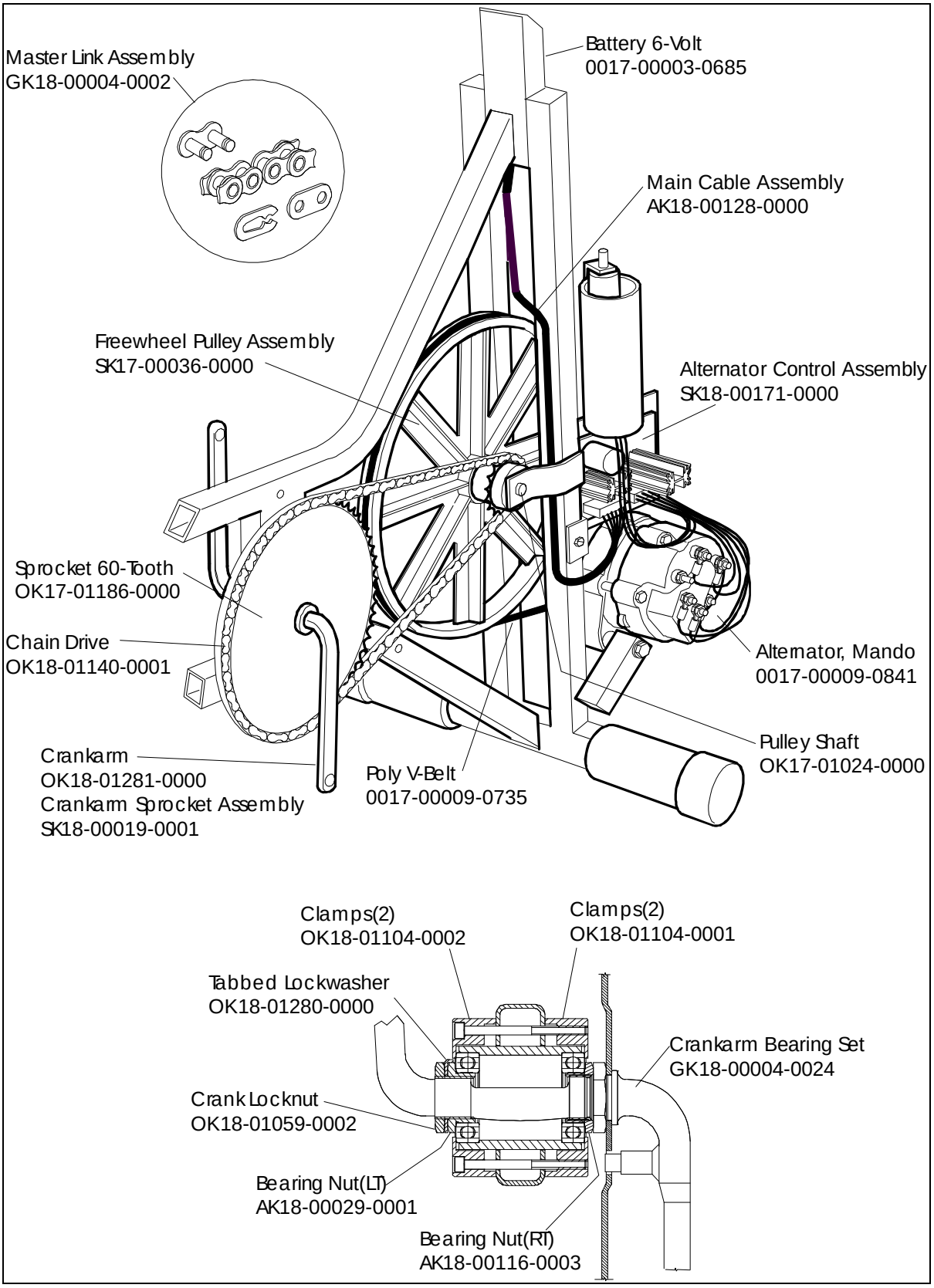
Master Link Assembly
GK18-00004-0002
Battery 6-Volt
0017-00003-0685
Main Cable Assembly
AK18-00128-0000
Freewheel Pulley Assembly
SK17-00036-0000
Alternator Control Assembly
SK18-00171-0000
Sprocket 60-Tooth
OK17-01186-0000
Chain Drive
OK18-01140-0001
Alternator, Mando
0017-00009-0841
Pulley Shaft
OK17-01024-0000
Crankarm
OK18-01281-0000
Crankarm Sprocket Assembly
SK18-00019-0001
Poly V-Belt
0017-00009-0735
Clamps(2)
OK18-01104-0002
Clamps(2)
OK18-01104-0001
Tabbed Lockwasher
OK18-01280-0000
Crankarm Bearing Set
GK18-00004-0024
Crank Locknut
OK18-01059-0002
Bearing Nut(LT)
AK18-00029-0001
Bearing Nut(RT)
AK18-00116-0003